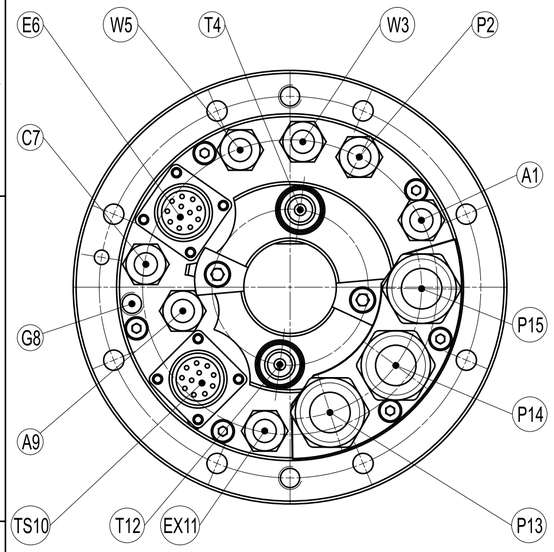

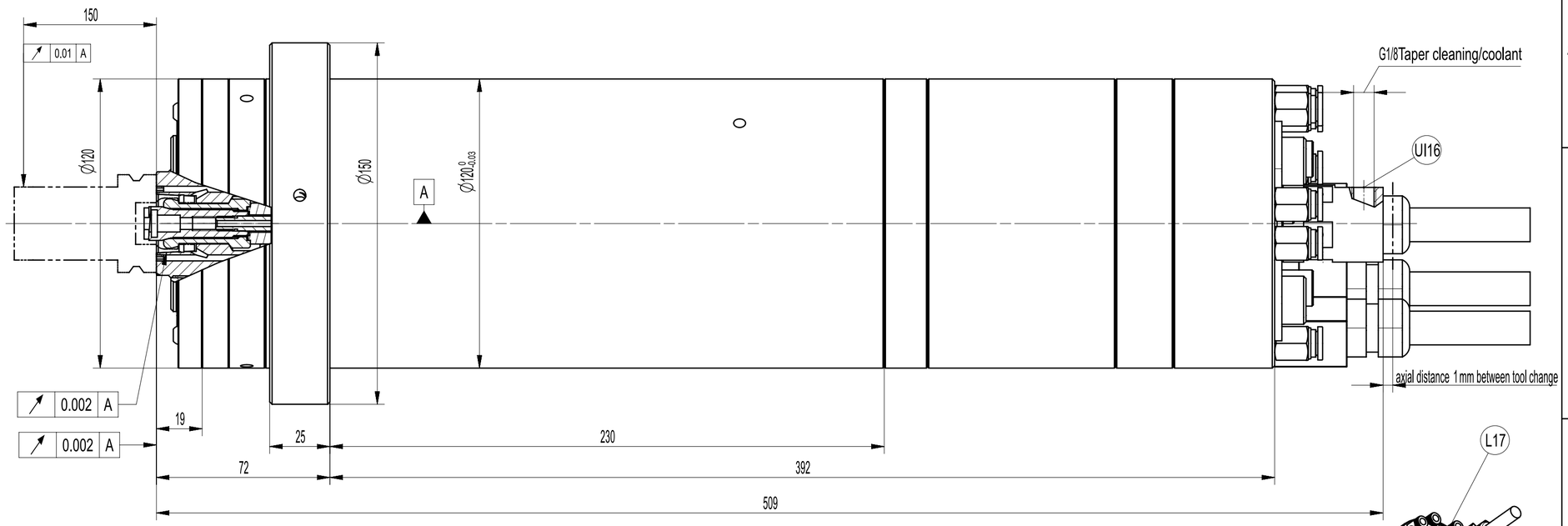

6-coolant nozzle with M4

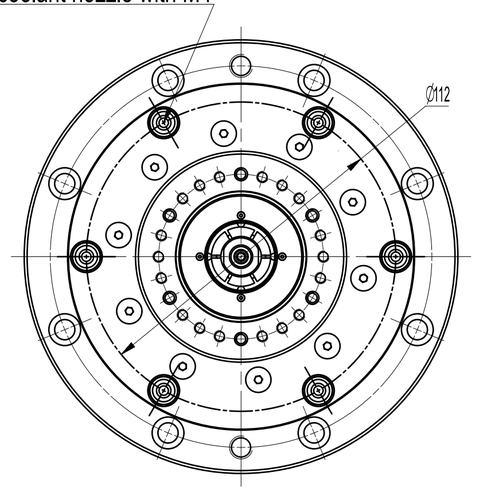

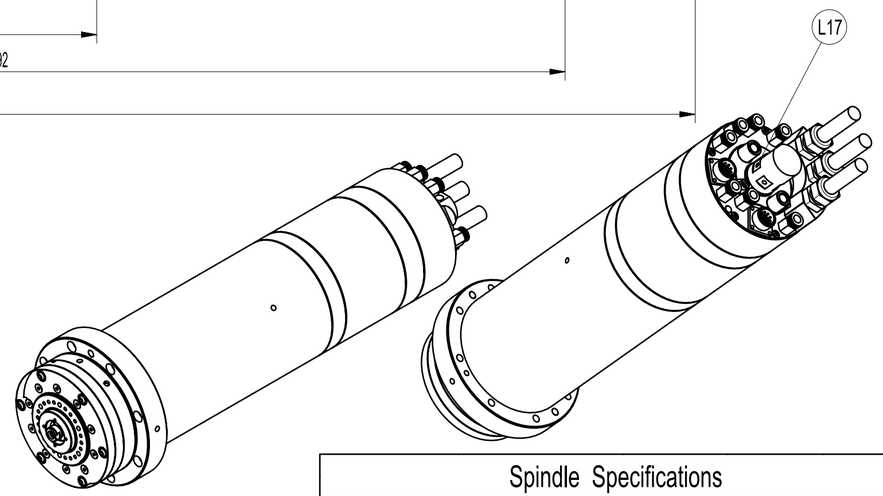

Spindle Specifications

SPEED	15000		42000		r/min
POWER	17		17		kW
Duty type	S1	S6,40%,2Min	S1	S6,40%,2Min	
Voltage	175	184	350	350	V
current	67	83	43	47	A
frequency	500	500	1400	1400	Hz
torque	10.8	13.4	3.9	4.8	Nm
Voltage constant	10.3				Vrpm/krpm
motor type	synchronous motor		Tool system	HSK E32/E40	
lubricant	oil air		Front seal	Protecting air flow,1-1.5bar	
Operating position	horizontal to vertical		Rotation	right and left	
ATC cylinder	hydraulic pressure unclamp 60-80bar,air pressure clamp 5bar				
encoder	Z=128,m=0.4,1Vpp output				
spindle coolant	Water,5L/min@25°C				

Label discription

No.	fuction	interface	describe
A1	oil air inlet	G1/8	with piping fitting,hose ∅6X4,front bearing,1.5bar
P2	air seal	G1/8	with piping fitting,hose ∅6X4,for bearing
W3	Water inlet	G1/8	with piping fitting,hose ∅8X6,for motor cooling
T4	unclamping tool	G1/8	oil pressure:60-80bar.Hydraulic hoses, not hard hoses
W5	Water outlet	G1/8	with piping fitting,hose ∅8X6,for motor cooling
E6	Encoder connector	M23	12 pin connection,increment encoder,z=128,m=0.4,1Vpp output
G8	GND	M8	
A9	oil air inlet	G1/8	with piping fitting,hose ∅6X4,rear bearing,1.5bar
TS10	ATC&Temp connector	M23	17 pin connection,PNP type Proximity switch with 3 wire,3 position.including motor temperature and front bearing temperature.
EX11	exhaust oil air	G1/4	with piping fitting,hose ∅8X6
T12	clamping tool	G1/8	gas pressure:5bar.Hydraulic hoses, not hard hoses
P13	POWER	M20X1.5	U,16mm^2 cable,length:5m
P14	POWER	M20X1.5	V,16mm^2 cable,length:5m
P15	POWER	M20X1.5	W,16mm^2 cable,length:5m

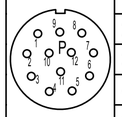

Encoder Connector

1	B-	7	Shield
2	----	8	B+
3	Z+	9	----
4	Z-	10	0V
5	A+	11	-
6	A-	12	+5V

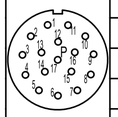

ATC&Temperature Connector

1	bearing PT100	7	10-30VDC	13	----
2	bearing PT100	8	Clamp without tool	14	motor PT1000
3	----	9	0V	15	motor PT1000
4	10-30VDC	10	10-30VDC	16	Shield
5	Unclamp tool	11	Clamp tool	17	----
6	0V	12	0V		----

Coolant nozzle&rotary unit interface

No.	fuction	interface	describe
C7	Coolant inlet for nozzle	G1/4	with piping fitting,hose ∅8X6,for coolant nozzle,0.5MPa
UI16	cleaning air/coolant inlet	G1/8	max coolant pressure 5MPa,max air pressure 5bar while changing tool
L17	leakage outlet	M7X1	leakage for rotary unit

未注尺寸公差			00	主轴外形图		1			
注：孔取(+)，轴取(-)			件号	名称		数量	材料	硬度	备注
尺寸/mm									
大于	至	公差							
-	6	±0.05							
6	30	±0.10							
30	120	±0.15							
120	250	±0.25							
250	500	±0.35							
500	1000	±0.45							
1000	1600	±0.55							
1600	2000	±0.65	更改号	签字	日期				

SUF 120XDJ42Q17

设计		比例	质量(kg)
校对		1:1.5	27
标准化审核			
工艺会签			
审核			
批准			

A2