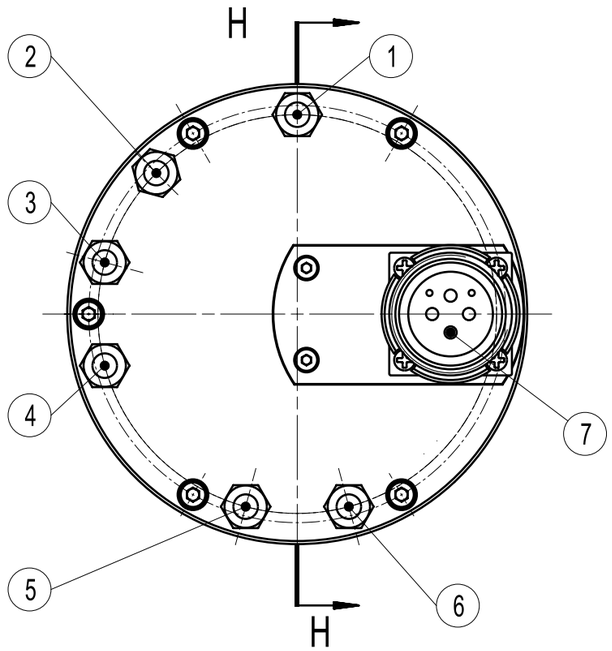

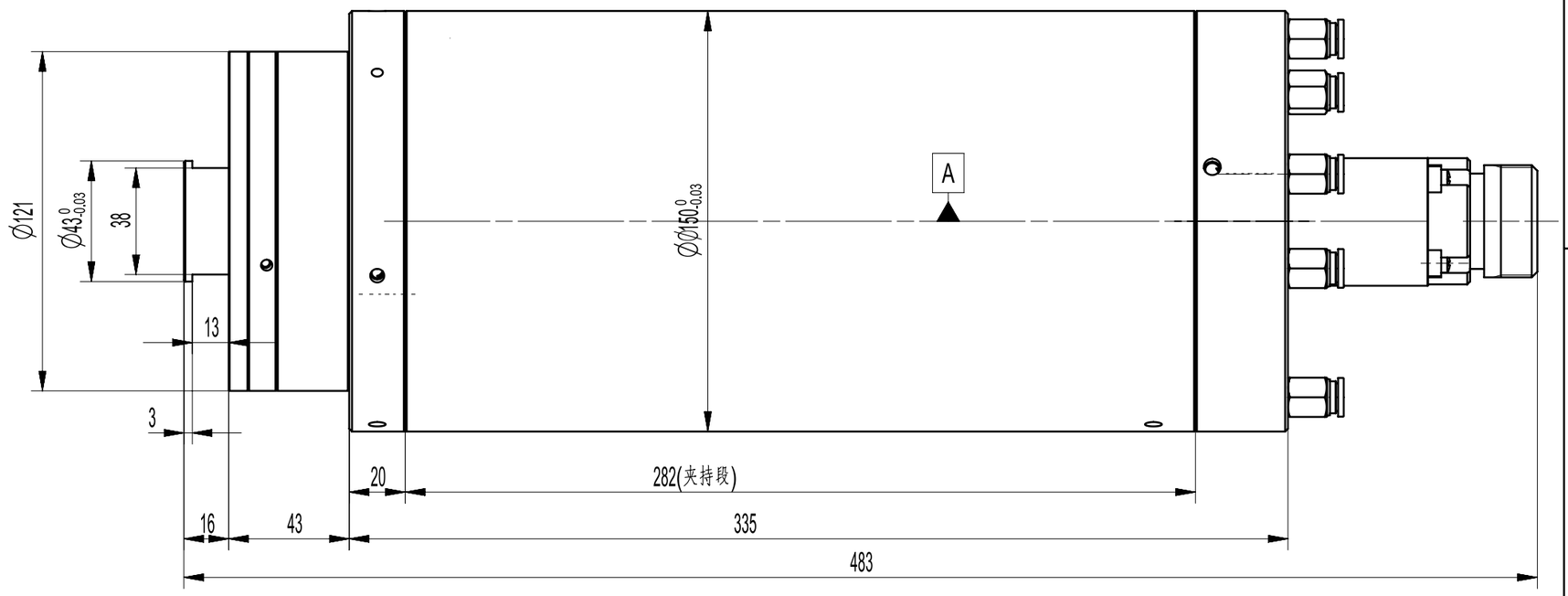

SECTION H-H

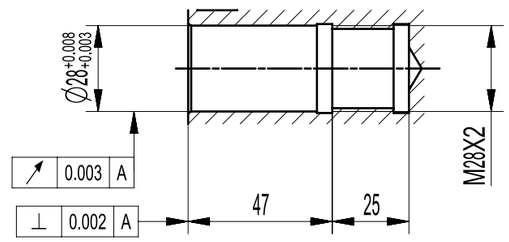

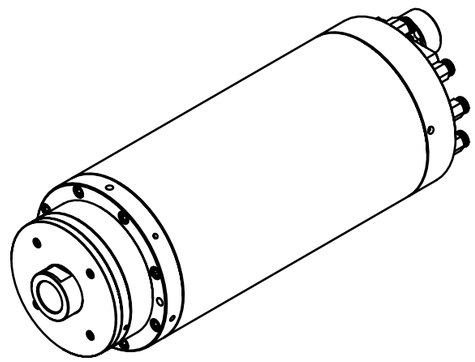

connection discription			
NO.	function	interface	discription
1	Water inlet	G1/4	equiped with piping fitting,hose size 8X6
2	oil air inlet	G1/8	equiped with piping fitting,hose size 6X4,1-1.5bar
3	oil air inlet	G1/8	equiped with piping fitting,hose size 6X4,1-1.5bar
4	air seal	G1/8	equiped with piping fitting,hose size 6X4,1bar
5	exhaust oil	G1/4	equiped with piping fitting,hose size 8X6
6	water inlet	G1/4	equiped with piping fitting,hose size 8X6
7	Power connector	M40	

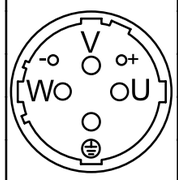

Power Connector			
+	----		
-	----		
U	phase U	⏚	GND
V	phase V		
W	phase W		

Spindle specification

Speed	24000	35000		r/min
Power	32	32		kW
Voltage	380	380		V
Current	64	57		A
Frequency	800	1166.7		Hz
Motor Type	Induction motor			
Lubrication	oil-air			
Lubricant	ISO VG22			
Air quality	Solids:5 micron,residual oil content:0.5mg/m^3			
Spindle coolant	Rust resistant cooling water, flow rate 5L/min@25℃			

未注尺寸公差			00	主轴外形图		1			
注：孔取(+)，轴取(-)			件 号	名 称		数量	材 料	硬 度	备 注
尺寸/mm						SUF		150MD35Y32	
大于	至	公差							
-	6	±0.05							
6	30	±0.10							
30	120	±0.15				设计		比例	重量
120	250	±0.25				校对		1:2	
250	500	±0.35				标准化审核			
500	1000	±0.45				工艺会签			
1000	1600	±0.55				审 核			
1600	2000	±0.65	更改号	签字	日期	批 准			

A3