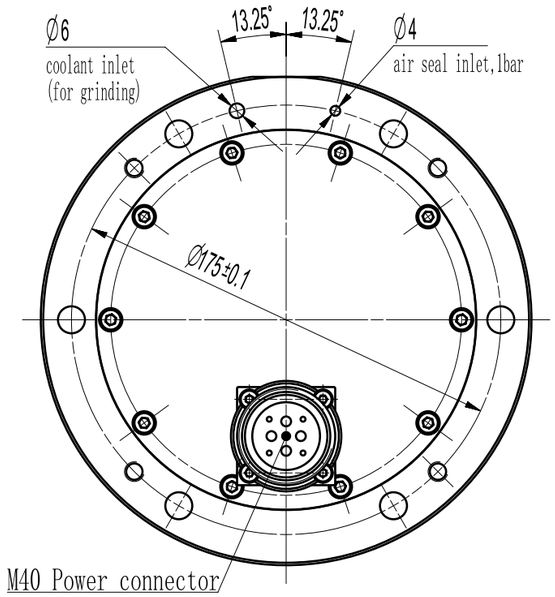


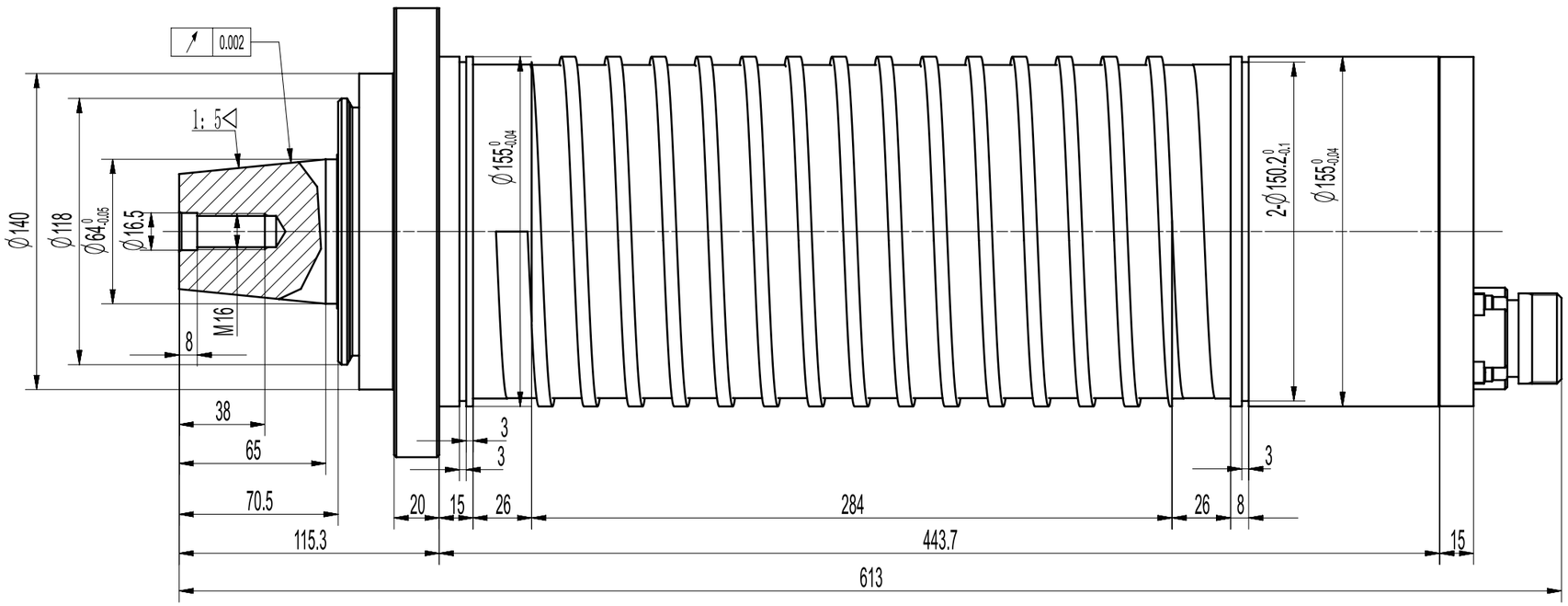


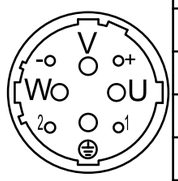


| | Power Connector | | | |
|---|---|---|---|---|
| | 1 | PT1000(motor) | + | PT100(bearing) |
| | 2 | PT1000(motor) | - | PT100(bearing) |
| | U | phase U | ⏚ | GND |
| | V | phase V | | |
| | W | phase W | | |

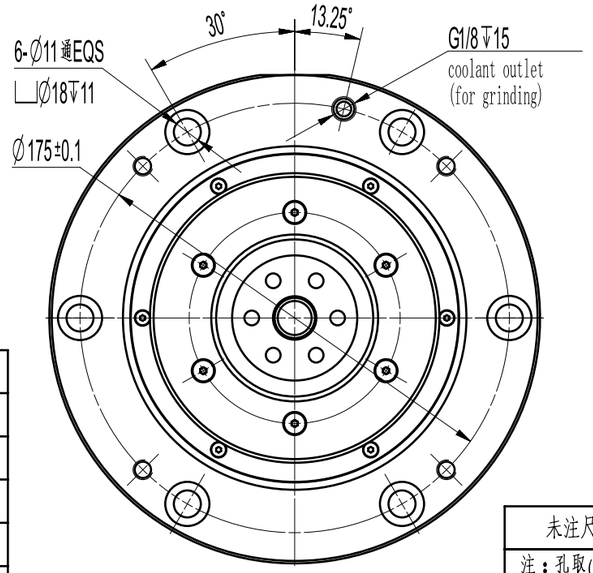


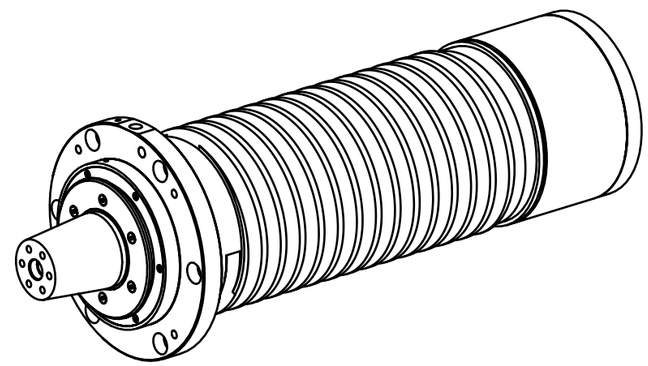

| Spindle specification | | | | | |
|---|---|---|---|---|---|
| Speed | 3000 | 6000 | | | r/min |
| Frequency | 150 | 300 | | | Hz |
| Power(S1) | 19 | 19 | | | kW |
| Torque(S1) | 62 | 31 | | | Nm |
| Voltage | 320 | 380 | | | V |
| Current(S1) | 49 | 36 | | | A |
| MotorType | Induction | | Rotation | Left & Right | |
| Lubricant | Grease | | Front seal | Air protection flow,1-1.5bar | |
| Operation direction | Vertical & Horizontal | | | | |
| Air quality | Solids:5 micron,residual oil content:0.5mg/m^3 | | | | |
| Spindle coolant | Rust resistant cooling water,flow rate 5L/min@25°C | | | | |

| 未注尺寸公差 | | | - | 主轴确认图 | | | | | |
|---|---|---|---|---|---|---|---|---|---|
| 注：孔取(+)，轴取(-) | | | 件号 | 名称 | | 数量 | 材料 | 硬度 | 备注 |
| Dimension/mm | | | | | | SUF | | 155MD06G19 | |
| up | to | clearance | | | | | | | |
| - | 6 | ±0.05 | | | | | | | |
| 6 | 30 | ±0.10 | | | | | | | |
| 30 | 120 | ±0.15 | | | | 设计 | | 比例 | 重量 |
| 120 | 250 | ±0.25 | | | | 校对 | | 1:2.5 | - |
| 250 | 500 | ±0.35 | | | | 标准化审核 | | | |
| 500 | 1000 | ±0.45 | | | | 工艺会签 | | | |
| 1000 | 1600 | ±0.55 | | | | 审核 | | | |
| 1600 | 2000 | ±0.65 | 更改号 | 签字 | 日期 | 批准 | | | |

A3